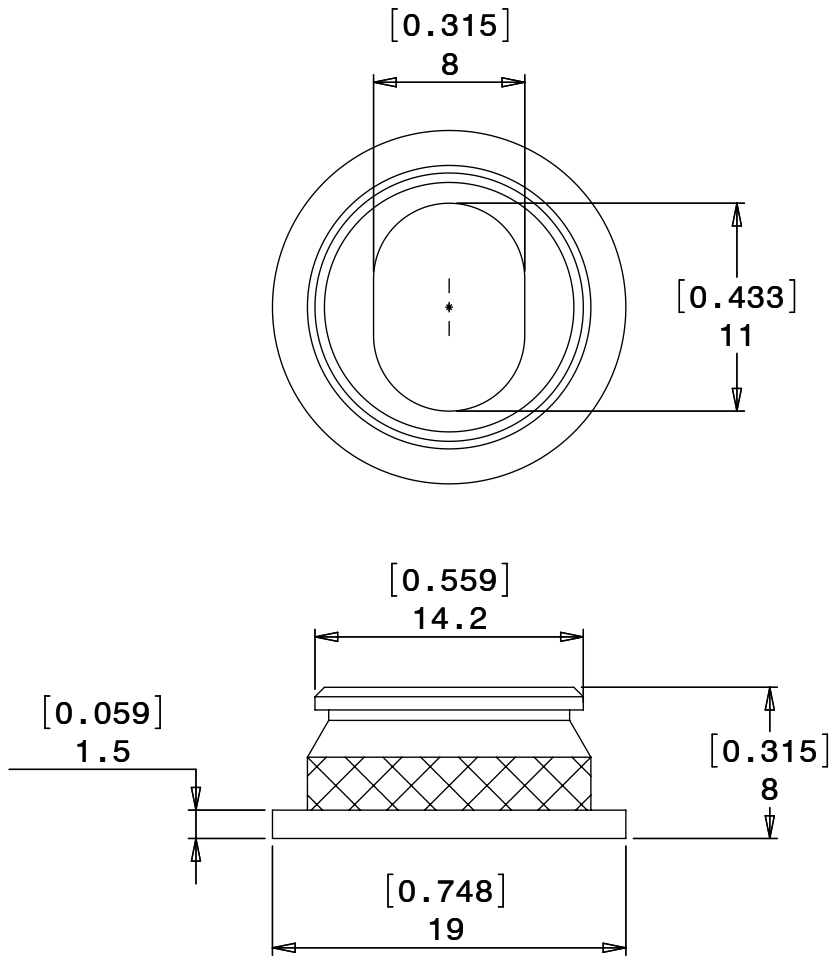

NOTES:
1. FINISH: BRASS

EISEN
LANSING, MICHIGAN 48911, USA
http://www.eisennet.com

Information in this drawing
is provided for reference only

DWG NO. 506000

OVAL BUSHING